EV4

Elevator Control Valves

EN ISO 9001

The BLAIN EV4-vvvf program includes the widest range of vvvf solution offered to the elevator industry for high performance passenger elevators. Easy to install, EV4's are smooth, reliable and precise in operation throughout extreme load and temperature variations with inbuilt overload protection and different energy saving modes. The EV4 system uses the control of L1000H vvvf drive in the up travel, while down travel is managed by the EV4 valve itself. In this way, the EV4-vvvf solution offers the most cost-effective and energy-efficient solution.

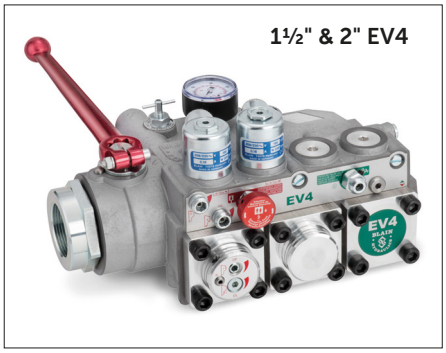

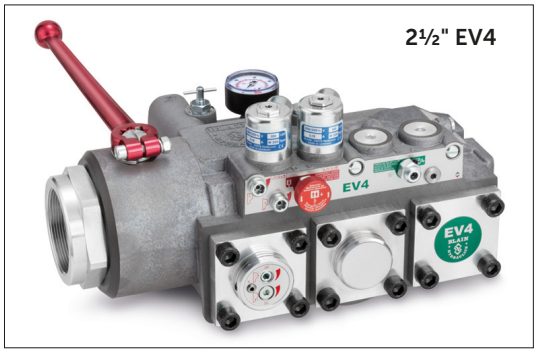

Description

Available port sizes are ¾", 1½", 2" and 2½" pipe threads, depending on flow. EV4 eliminates high inrush currents and do not require wye-delta switching. According to customers' elevator data, valves are factory adjusted, ready for operation and very simple to readjust if desired. The L1000H YASKAWA drive combined with feedback systems that are designed to compensate elevator speed fluctuations regardless oil temperature and car load conditions.
Caution: The EV4 valve is to be used only together with YASKAWA L1000H inverter and not as standalone control valve.
EV4 valves include the following features essential for efficient installation and trouble free service:

B44.1
C US
ASME-A17.1

- Simple Responsive Adjustment
- Temperature and Pressure Compensations
- Pressure Gauge and Shut Off Cock
- Self Closing Manual Lowering
- Self Cleaning Pilot Line Filters
- Self Cleaning Main Line Filter (Z-T)
- Built-in Turbulence Suppressors
- 70 HRc Rockwell Hardened Bore Surfaces
- 100% Continuous Duty Solenoids
- Compact and asthetic design

Technical Data:		¾" EV4	1½" & 2" EV4	2½" EV4
Flow Range:	l/min (US gpm)	10-125 (2-33)	30-800 (8-212)	500-1530 (130-405)
Pressure Range (valve):	bar (psi)	8-70 (116-1015)	8-70 (116-1015)	8-68 (116-986)
Burst Pressure Z:	bar (psi)	575 (8340)	505 (7324)	340 (4931)
Pressure Drop P–Z:	bar (psi)	6 (87) at 125 l/min	4 (58) at 800 l/min	4 (58) at 1530 l/min
Weight:	kg (lbs)	5 (11)	10 (22)	14 (31)

Solenoids AC: 24 V/1.8 A, 42 V/1.0 A, 110 V/0.43 A, 230 V/0.18 A, 50/60 Hz. **Insulation Class, AC and DC:** IP 68
Solenoids DC: 12 V/2.0 A, 24 V/1.1 A, 42 V/0.5 A, 48 V/0.6 A, 80 V/0.3 A, 110 V/0.25 A, 196 V/0.14 A.
Oil Viscosity: 25-75 cSt. at 40°C (104°F). **Max. Oil Temperature:** 70°C (158°F)
Operation oil temperature range: 10°C-60°C (50°F-140°F), for oil VGA46: 250cSt.-20 cSt.
Optimal oil temperature range: 25°C-55°C (77°F-131°F), for oil VGA46: 100cSt.-24 cSt.
Ambient temperature range: 0°C-70°C (32°F-158°F)

¾" EV4

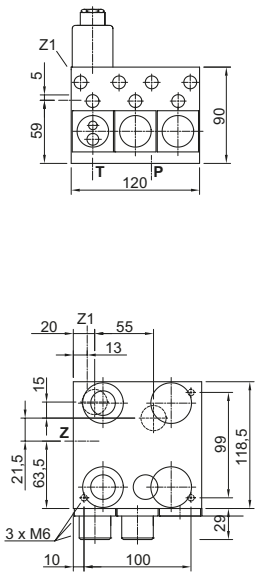

1½" & 2" EV4

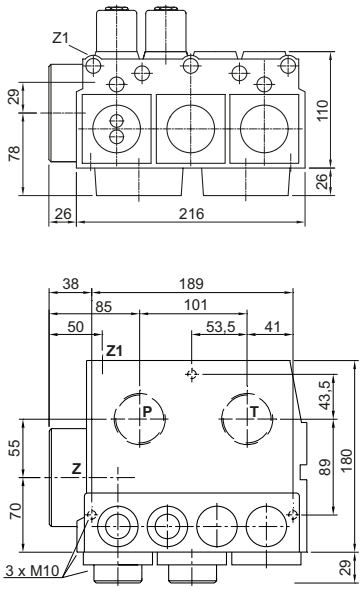

2½" EV4

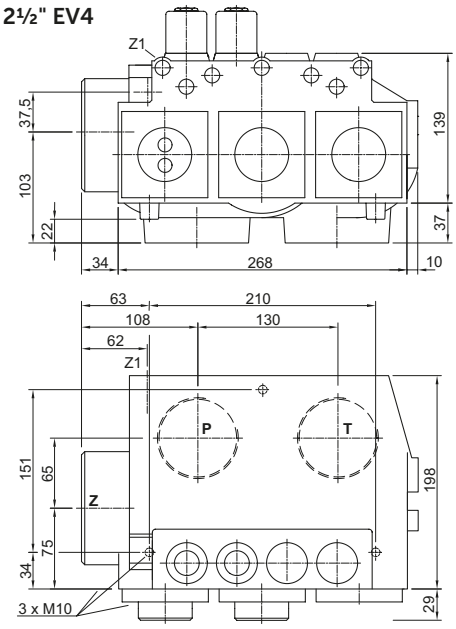

Blain Hydraulics GmbH
Pfaffenstrasse 1
74078 Heilbronn
Germany

Tel. +49 7131 28210
Fax +49 7131 282199
www.blain.de
info@blain.de

BLAIN HYDRAULICS GmbH

Designer and Manufacturer of the highest quality control valves & safety components for hydraulic elevators

Optional Equipment

EN	Emergency Power Solenoid	**DH**	High Pressure Switch
CSA	CSA Solenoids	**DL**	Low Pressure Switch
KS	Slack Rope Valve	**CX**	Pressure Compensated Down
BV	Main Shut-Off Valve	**MX**	Auxiliary Down
HP	Hand Pump		

B44.1
C US
ASME-A17.1

EV4

¾"

1½" & 2" EV4

2½"

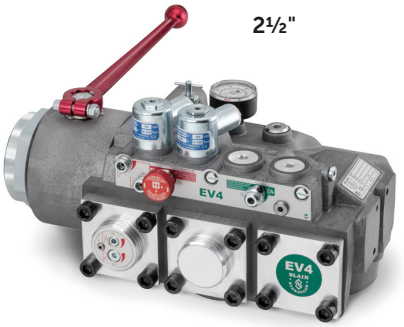

Up Up to 1 m/s (200 fpm). 3 Full Speeds and 1 Levelling Speed. Up Start, speeds, transition times and up stop are adjusted by inverter parameters.

Down Up to 1 m/s (200 fpm). 1 Full Speed and 1 Levelling Speed. All down functions are smooth and adjustable.

Control Elements

- **C** Solenoid (Down Deceleration)
- **D** Solenoid (Down Stop)
- **H** Manual Lowering
- **S** Relief Valve
- **U** By Pass Valve
- **V** Check Valve
- **X** Full Speed Valve (Down)
- **Y** Levelling Valve (Down)
- **F** Filter

Adjustments UP

None
(Fixed Orifice)

Adjustments DOWN

- **6** Down Acceleration
- **7** Down Full Speed
- **8** Down Deceleration
- **9** Down Levelling Speed

Hydraulic Circuit

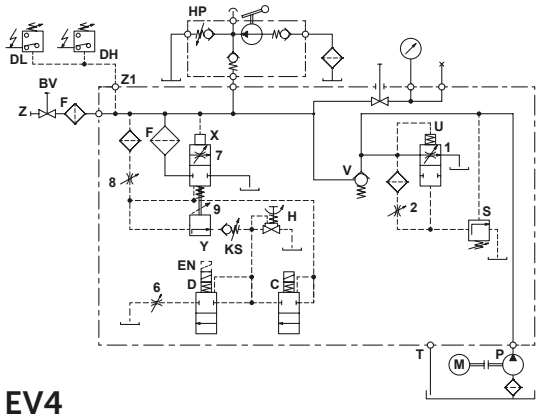

EV4

Electrical Sequence

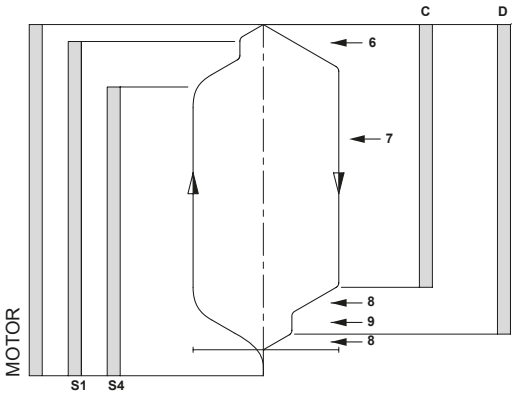

UP direction control

Caution: Please refer to the detailed installation and set-up procedure of the EV4 handbook and L1000H technical manual.

The up direction control is done by the YASKAWA L1000H inverter. The inverter with the help of its software calculates the load in the car, read the current oil temperature through a temperature sensor and process oil and pump performance data in order to obtain motor speeds for the nominal, intermediate, inspection and levelling speeds.

After giving the oil type and elevator data a teach run with empty car is sufficient enough for the inverter to self-learn and configure itself fully automatic during the initial set-up.

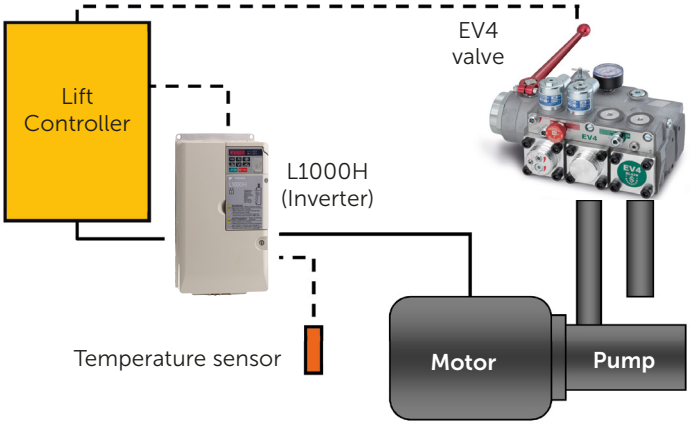

Warning: Only qualified personnel should adjust or service the EV4 valve and the L1000H drive. Unauthorised manipulation may result in injury, loss of life or damage to equipment. Prior to servicing internal parts, ensure that the electrical controller is switched off, cylinder line is closed and residual pressure in the valve is reduced to zero.

Adjustments DOWN

Valves are already adjusted and tested. Check electrical operation before changing valve settings. Test that the correct solenoid is energised, by removing nut and raising solenoid slightly to feel pull.

Nominal Settings: Adjustments **7** & **9** approx. level with flange face. Two turns in either direction may then be necessary. Adjustments **6** & **8** turn all the way 'in' (clockwise), then 1.5 turns 'out' (c-clockwise). One final turn in either direction may be necessary.

6. Down Acceleration: When solenoids **C** and **D** are energised, the car will accelerate downwards according to the setting of adjustment **6**. 'In' (clockwise) provides a softer down acceleration, 'out' (c-clockwise) a quicker acceleration.

7. Down Speed: With solenoids **C** and **D** energised as in **6** above, the full down speed of the car is according to the setting of adjustment **7**. 'In' (clockwise) provides a slower down speed, 'out' (c-clockwise) a faster down speed.

8. Down Deceleration: When solenoid **C** is de-energised whilst solenoid **D** remains energised, the car will decelerate according to the setting of adjustment **8**. 'In' (clockwise) provides a softer deceleration, 'out' (c-clockwise) a quicker deceleration.
Attention: Do not close all the way in! Closing adjustment 8 completely (clockwise) may cause the car to fall on the buffers.

9. Down Levelling: With solenoid **C** de-energised and solenoid **D** energised as in **8** above, the car will proceed at its down levelling speed according to the setting of adjustment **9**. 'In' (clockwise) provides a slower, 'out' (c-clockwise) a faster down levelling speed.

Down Stop: When solenoid **D** is de-energised with solenoid **C** remaining de-energised, the car will stop according to the setting of adjustment **8** and no further adjustment will be required.

KS Slack Rope Valve: Both solenoids **C** and **D** must be de-energized beforehand! Loosen the small grub screw on the top of the **K** on the left hand side. The **KS** is adjusted with a 3 mm Allan Key by turning the screw **K** 'in' for higher pressure and 'out' for lower pressure. With **K** turned all the way 'in', then half a turn back out, the unloaded car should descend when Manual Lowering **H** is opened. Should the car not descend, **K** must be backed off until the car just begins to descend, then backed off a further half turn to ensure that with cold oil, the car can be lowered as required.

Adjustments pressure relief valve

Valves are already checked for functionality. Check electrical operation before changing inverter settings. Please refer to the EV4 inverter manual for necessary parameter settings.

S Relief Valve: ‚In' (clockwise) produces a higher, ‚out' (c-clockwise) a lower maximum pressure setting. After turning ‚out', open manual lowering **H** for an instant.
Important: When testing relief valve, close ball valve gradually.

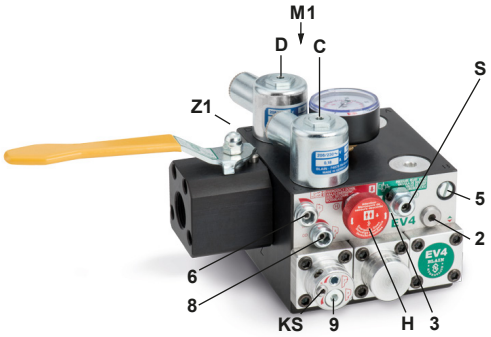

M1 Second pressure gauge connection, ½"
Z1 Pressure switch connection, ¼"

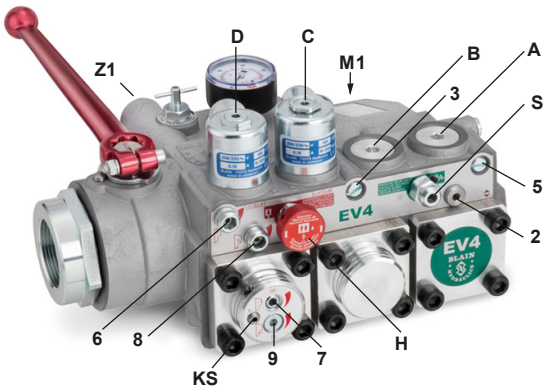

Important: Length of ¾" thread on pump connections should not be longer than 14 mm!

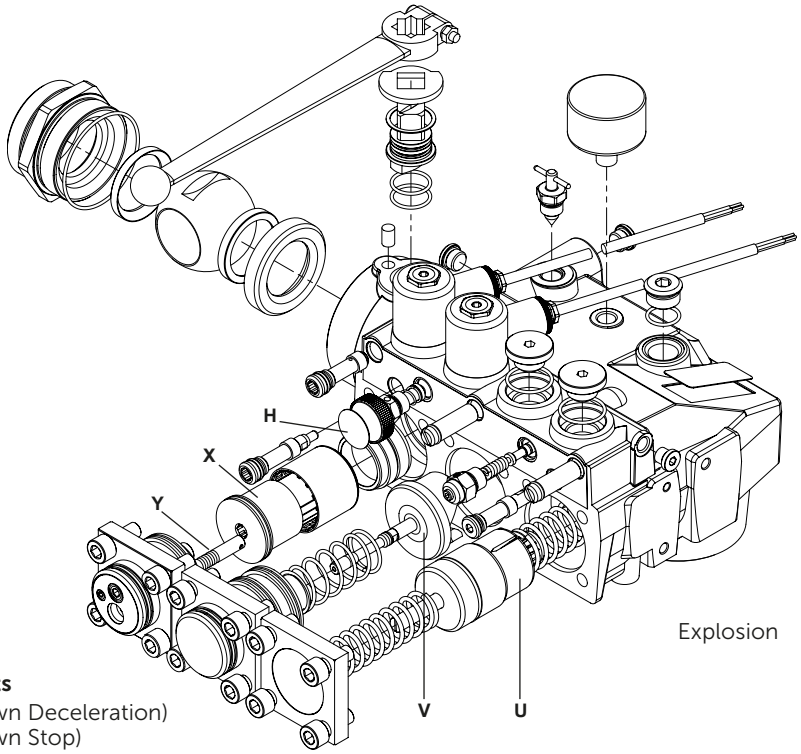

Explosion

Adjustments DOWN
6 Down Acceleration
7 Down Full Speed
8 Down Deceleration
9 Down Levelling Speed

Plugs
3
5
A
B

Control Elements
C Solenoid (Down Deceleration)
D Solenoid (Down Stop)
H Manual Lowering
S Relief Valve
U By Pass Valve
V Check Valve
X Full Speed Valve (Down)
Y Levelling Valve (Down)
2 Fix Orifice

EV4 Spare Parts List

Pos.	No.	Item
1	FS	Lock Screw - Flange
	FO	O-Ring - Flange
	1F4	Flange - By Pass
	UO	0-Ring - By Pass Valve
	U4	By Pass Valve
	UD	Noise Suppressor
	UF1	Spring - By Pass
	UF2	Spring - By Pass
	US	Dead Stop
2	2	Fixed orifice
3	3	Plug
4	4F4	Flange - Check Valve
	FO	0-Ring - Flange
	VF	Spring - Check Valve
	VO	Seal - Check Valve
	V	Check Valve
	W	Up-Levelling Valve
	WO	0-Ring - Up Levelling Valve
	VO	Seal - Check Valve
	W6	Screw - Check Valve
5	3	Plug
6	3	Adjustment - Down Acceleration
7	7F	Flange - Down Valve
	FO	0-Ring - Flange
	7O	0-Ring - Adjustment
	7E	Adjustment - Down Valve
	UO	0-Ring - Down Valve
	XO	Seal - Down Valve
	X	Down Valve
	XD	Noise Suppressor
	F	Main Filter
8	8	Adjustment - Down Deceleration
9	EO	0-Ring - Adjustment
	9E	Adjustment - Down Levelling
	9F	Spring - Down Valve
	Y	Down Levelling Valve
H	H	Manual Lowering - Self Closing
	HO	Seal - Manual Lowering
S	SE	Adjustment - Screw
	SM	Hexagonal
	MS	Grub Screw
	SO	0-Ring - Nipple
	SZ	Nipple
	SF	Spring
	SK	Piston
C+D	MM	Nut - Solenoid
	M	Coil - Solenoid (indicate voltage)
	DR	Tube - Solenoid 'Down'
	MO	0-Ring - Solenoid
	DF	Spring - Solenoid 'Down'
	DN	Needle - 'Down'
	DK	Core - Solenoid
	DG	Seat Housing with Screen-'Down'
	FD	Filter Solenoid
	DS	Seat - Solenoid 'Down'

Some parts occur more than once in different positions of the valve.

O-Ring-Size

No.	¾"	1½"	2½"
FO	26x2P	47x2.5P	58x3P *
EO	9x2P	9x2P	9x2P
UO	26x2V	39.34x2.62V	58x3V
WO	5.28x1.78V	5.28x1.78V	5.28x1.78V
VO	23x2,5V	42x3V	60x3V **
7O	5.28x1.78P	9x2P	9x2P
XO	13x2V	30x3V	47x3V
HO	5.28x1.78V	5.28x1.78V	5.28x1.78V
SO	5.28x1.78P	5.28x1.78P	5.28x1.78P
MO	26x2P	26x2P	26x2P

* FO by 4F 2 ½" is 67x2.5P
** 90 Shore

O-Ring: V = FKM - Viton
P = NBR - Perbunan

US is only for EV4 1 ½" and above sizes!

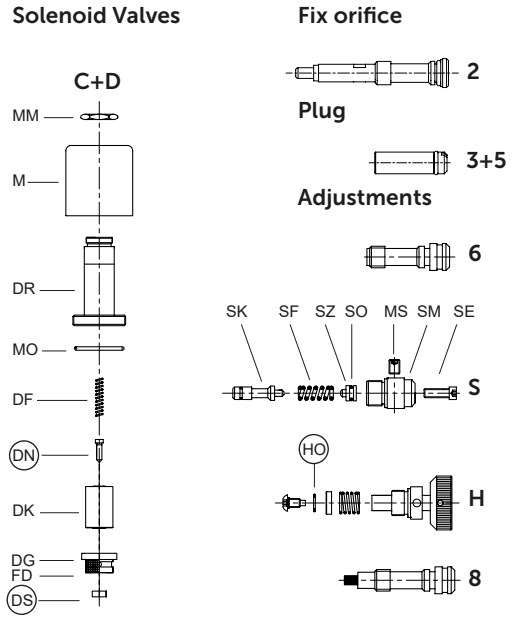

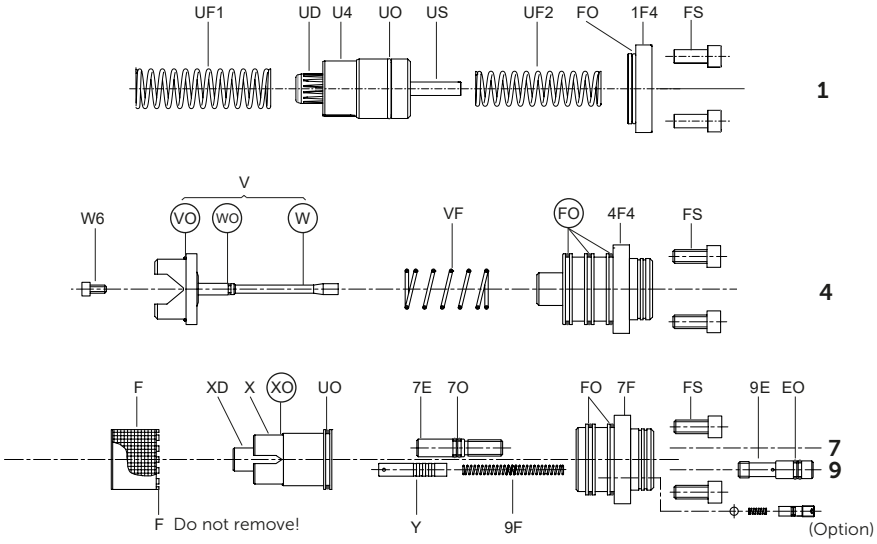

In case of down leakage, replace and test in the following order: DS & DN, XO, VO, WO, FO + HO.

Taper threads: Do not exceed 8 turns of piping into the valve connections.

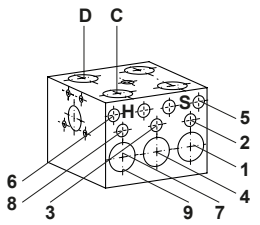

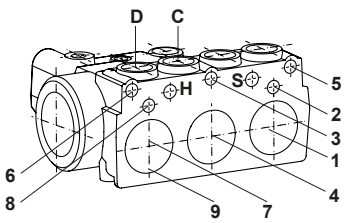

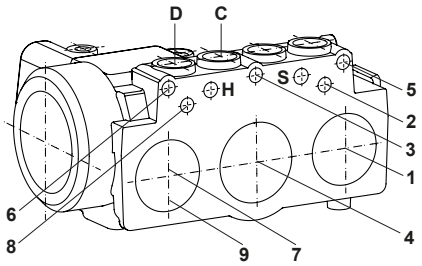

Flow Guide Selection Charts for Down Direction

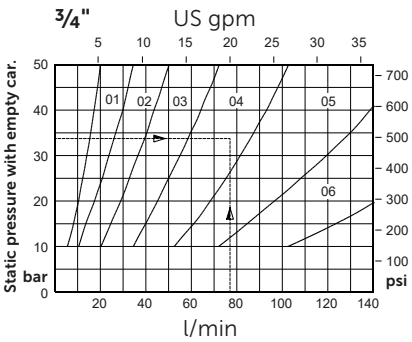

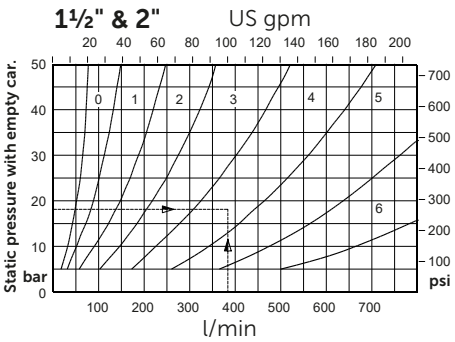

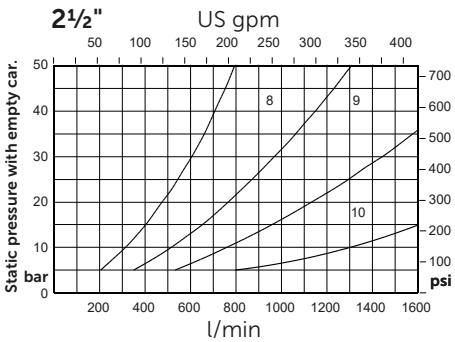

To order EV4: Size (inch), state pump flow, empty car pressure (or flow guide size) and solenoid voltage.
Example order: 1½"EV4, 380l/min, 18bar (empty), 110AC or 1½"EV4/4/110AC